The product using material and processing must conform to the "WI-PZ-001"HSF technical standard control requirements

RoHS

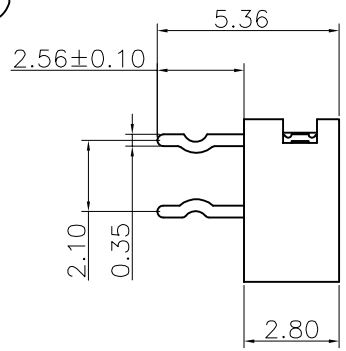

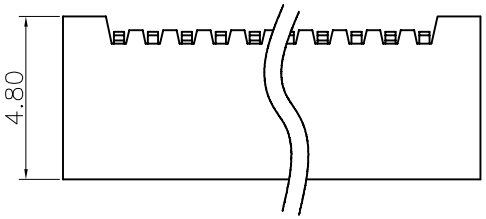

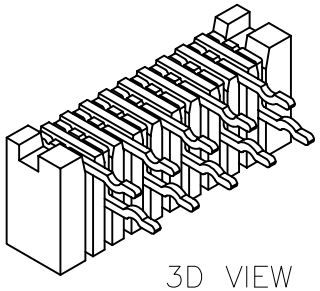

3D VIEW

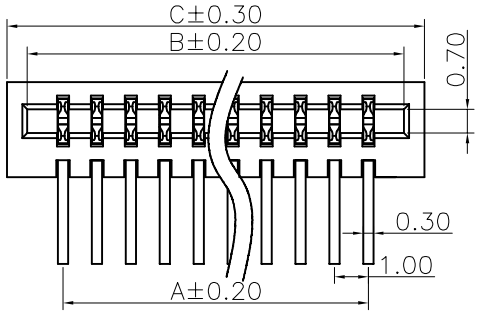

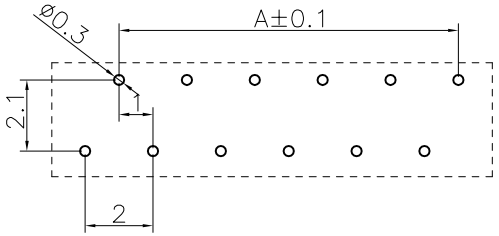

PCB Layout

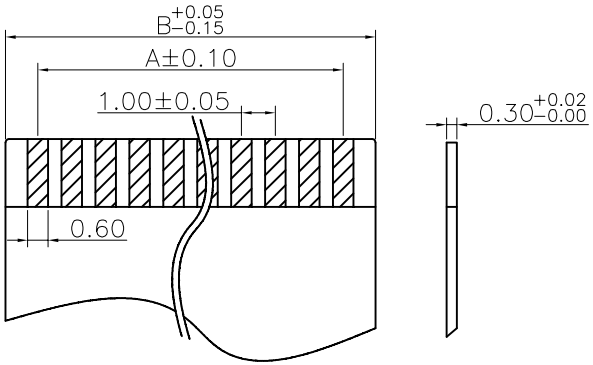

NOTE:
1.MATERIAL SPECIFICATION:
1-1.HOUSING:PA6T
1-2.CONTACTS:PHOSPHOR COPPER
2.PLATING SPECIFICATION:
2-1.CONTACTS:
TIN/AU PLATED OVER ALL.
4.ELECTRICAL PERFORMANCE:
4-1. RATED CURRENT : 1A AC,DC
RATED VOLTAGE : 50V AC/DC
4-2.INSULATION RESISTANCE: 100MΩ MIN
CONTACT RESISTANCE : 30mΩ(MAX.)
4-3.WITHSTANDING VOLTAGE: 500V AC/minute
5.ENVIRONMENTAL PERFORMANCE:
OPERATING TEMPERATURE: -25°C~+85°C.
6.PACKAGE SPEC: TUBE
7.P/N:

F1005 28 F 9-1 XX 1 X X 01

SERIES NO:
HEIGHT:
28: 2.8mm
MALE FEMALE:
F-FEMALE
ANGLE:
9-90°
ROW NO:
1-SINGLE ROW
COLOR:
M-BEIGE
K-WHITE
S-NATURE
PLATING:
A-ALL AU G/F
C-BRIGHE TIN
1-G/F
TERMIPOINT:
1-DIP
PIN Q'PY:
04~40

Circuit	Dimensions(mm)			Circuit	Dimensions(mm)		
	A	B	C		A	B	C
04	3.00	5.10	6.30	23	22.00	24.10	25.30
05	4.00	6.10	7.30	24	23.00	25.10	26.30
06	5.00	7.10	8.30	25	24.00	26.10	27.30
07	6.00	8.10	9.30	26	25.00	27.10	28.30
08	7.00	9.10	10.30	27	26.00	28.10	29.30
09	8.00	10.10	11.30	28	27.00	29.10	30.30
10	9.00	11.10	12.30	29	28.00	30.10	31.30
11	10.00	12.10	13.30	30	29.00	31.10	32.30
12	11.00	13.10	14.30	31	30.00	32.10	33.30
13	12.00	14.10	15.30	32	31.00	33.10	34.30
14	13.00	15.10	16.30	33	32.00	34.10	35.30
15	14.00	16.10	17.30	34	33.00	35.10	36.30
16	15.00	17.10	18.30	35	34.00	36.10	37.30
17	16.00	18.10	19.30	36	35.00	37.10	38.30
18	17.00	19.10	20.30	37	36.00	38.10	39.30
19	18.00	20.10	21.30	38	37.00	39.10	40.30
20	19.00	21.10	22.30	39	38.00	40.10	41.30
21	20.00	22.10	23.30	40	39.00	41.10	42.30
22	21.00	23.10	24.30				

REV.	REVISION RECORD	DATE
A0	NEW RELEASE	21.01.13

UNIT: mm
SIZE: A4

GENERAL TOLERANCES	
LINEAR	ANGLES
0.0±0.35	X°REF±6°
0.00±0.25	X°±3°
0.000±0.10	X°X' ±2°

SCALE: 1:1	NAME	DATE
APPROVED	Wang_jr	21.01.13
DESIGNER	Han_Gao	21.01.13
DRAWN	Zijun_Huang	21.01.13

PART.NO: F100528F9-1XX1XX01

DWG.NO: ENDE05

TITLE: PITCH 1.00mm 90 ° C TYPE HORIZONTAL INSERTION

万连科技 WanLian Teconology Co., Ltd

REV: A0

SHEET: 1/1